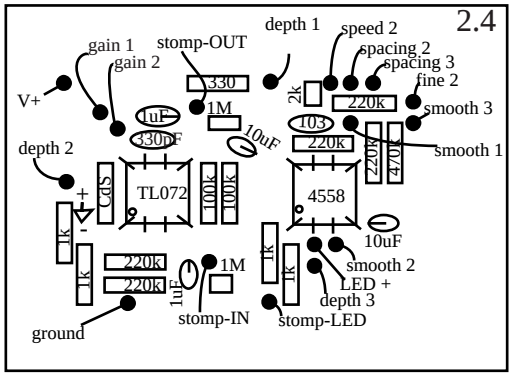
2.4
gain 1
gain 2
stomp-OUT
depth 1
speed 2
spacing 2
spacing 3
fine 2
V+
330
1M
2k
220k
smooth 3
1uF
330pF
103
10uF
220k
smooth 1
depth 2
CdS
TL072
100k
100k
4558
220k
470k
1k
10uF
1k
220k
220k
1M
1k
1k
smooth 2
LED +
1uF
depth 3
ground
stomp-IN
stomp-LED

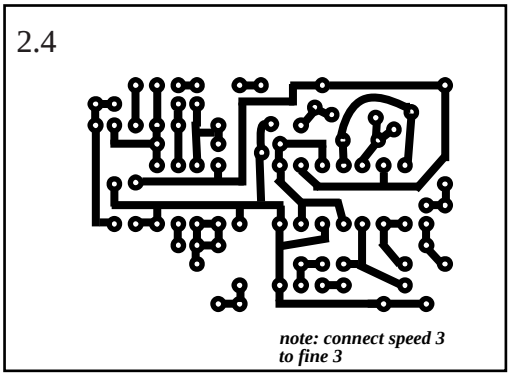
2.4
note: connect speed 3
to fine 3

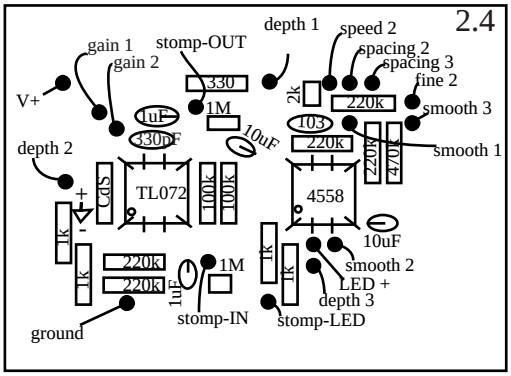
2.4
gain 1
gain 2
stomp-OUT
depth 1
speed 2
spacing 2
spacing 3
fine 2
V+
330
1M
2k
220k
smooth 3
1uF
330pF
103
10uF
220k
smooth 1
depth 2
CdS
TL072
100k
100k
4558
220k
470k
1k
10uF
1k
220k
220k
1M
1k
1k
smooth 2
LED +
1uF
depth 3
ground
stomp-IN
stomp-LED

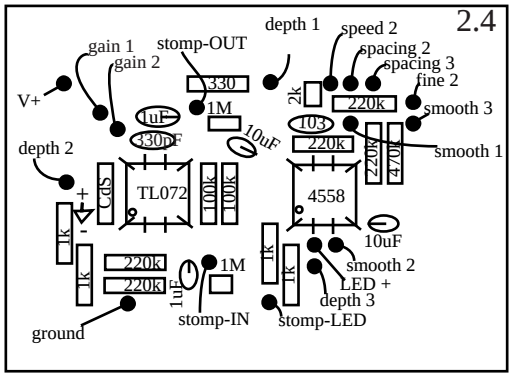
2.4
gain 1
gain 2
stomp-OUT
depth 1
speed 2
spacing 2
spacing 3
fine 2
V+
330
1M
2k
220k
smooth 3
1uF
330pF
103
10uF
220k
smooth 1
depth 2
CdS
TL072
100k
100k
4558
220k
470k
1k
10uF
1k
220k
220k
1M
1k
1k
smooth 2
LED +
1uF
depth 3
ground
stomp-IN
stomp-LED

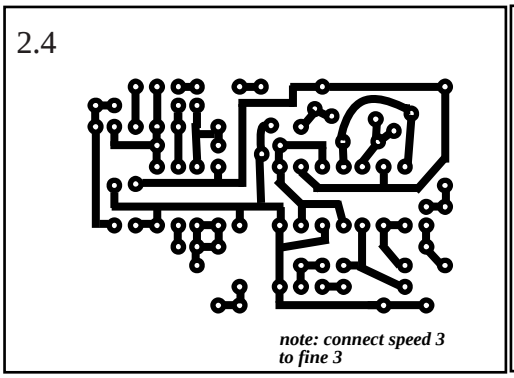
2.4
note: connect speed 3
to fine 3

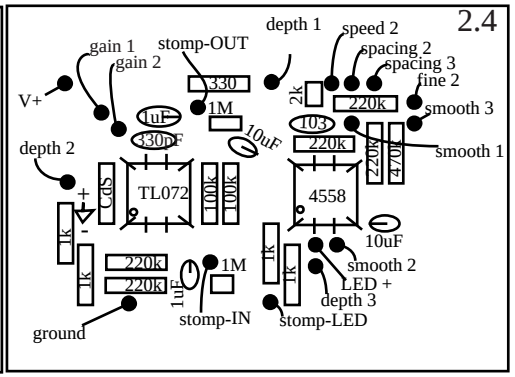
2.4
gain 1
gain 2
stomp-OUT
depth 1
speed 2
spacing 2
spacing 3
fine 2
V+
330
1M
2k
220k
smooth 3
1uF
330pF
103
10uF
220k
smooth 1
depth 2
CdS
TL072
100k
100k
4558
220k
470k
1k
10uF
1k
220k
220k
1M
1k
1k
smooth 2
LED +
1uF
depth 3
ground
stomp-IN
stomp-LED

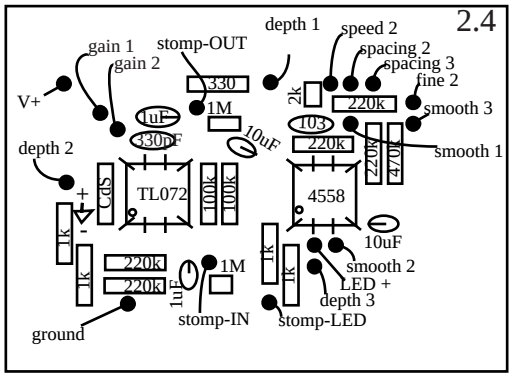
2.4
gain 1
gain 2
stomp-OUT
depth 1
speed 2
spacing 2
spacing 3
fine 2
V+
330
1M
2k
220k
smooth 3
1uF
330pF
103
10uF
220k
smooth 1
depth 2
CdS
TL072
100k
100k
4558
220k
470k
1k
10uF
1k
220k
220k
1M
1k
1k
smooth 2
LED +
1uF
depth 3
ground
stomp-IN
stomp-LED

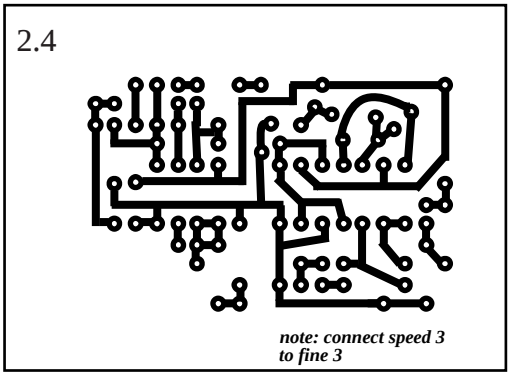
2.4
note: connect speed 3
to fine 3

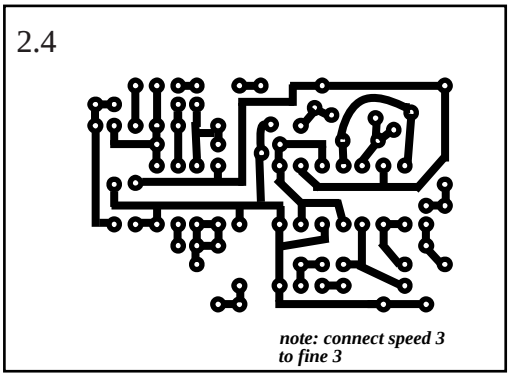
2.4
note: connect speed 3
to fine 3

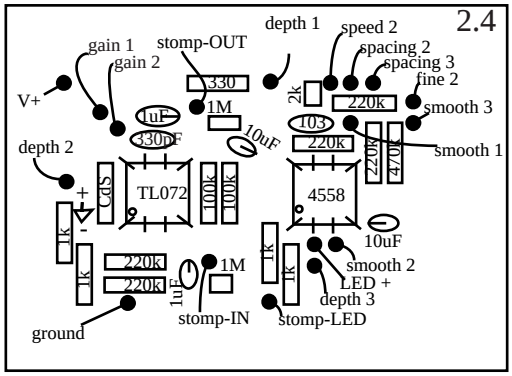
2.4
gain 1
gain 2
stomp-OUT
depth 1
speed 2
spacing 2
spacing 3
fine 2
V+
330
1M
2k
220k
smooth 3
1uF
330pF
103
10uF
220k
smooth 1
depth 2
CdS
TL072
100k
100k
4558
220k
470k
1k
10uF
1k
220k
220k
1M
1k
1k
smooth 2
LED +
1uF
depth 3
ground
stomp-IN
stomp-LED

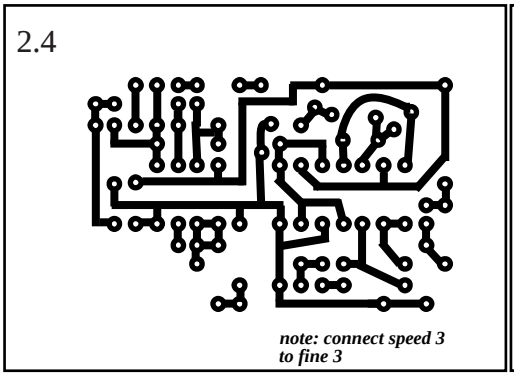
2.4
note: connect speed 3
to fine 3

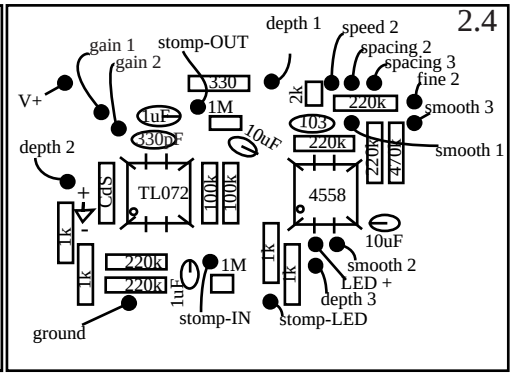
2.4
gain 1
gain 2
stomp-OUT
depth 1
speed 2
spacing 2
spacing 3
fine 2
V+
330
1M
2k
220k
smooth 3
1uF
330pF
103
10uF
220k
smooth 1
depth 2
CdS
TL072
100k
100k
4558
220k
470k
1k
10uF
1k
220k
220k
1M
1k
1k
smooth 2
LED +
1uF
depth 3
ground
stomp-IN
stomp-LED

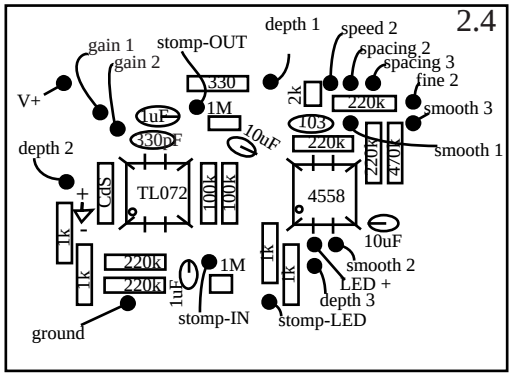
2.4
gain 1
gain 2
stomp-OUT
depth 1
speed 2
spacing 2
spacing 3
fine 2
V+
330
1M
2k
220k
smooth 3
1uF
330pF
103
10uF
220k
smooth 1
depth 2
CdS
TL072
100k
100k
4558
220k
470k
1k
10uF
1k
220k
220k
1M
1k
1k
smooth 2
LED +
1uF
depth 3
ground
stomp-IN
stomp-LED

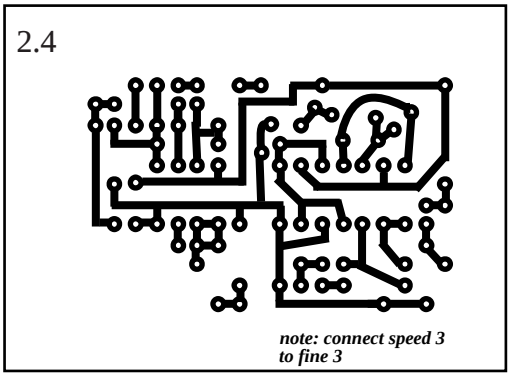
2.4
note: connect speed 3
to fine 3

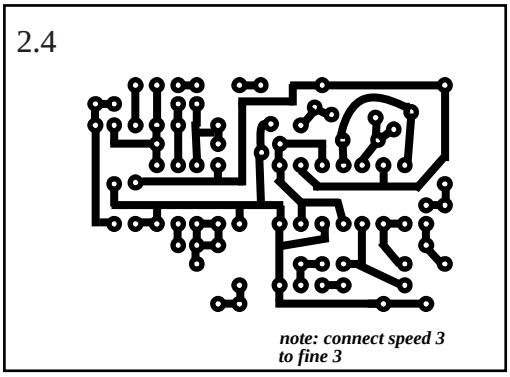
2.4
note: connect speed 3
to fine 3